0V8858 800万摄像头/1050050045

CONNECTOR
PIN DESCRIPTION

PIN	SIGNAL
1	AF_2.8V
2	AVDD_2.8V
3	DVDD_1.2V
4	DOVDD1.8V
5	RESET
6	PWDN
7	SCL
8	SDA
9	MCLK
10	DGND
11	MDN0
12	MDP0
13	DGND
14	MDN1
15	MDP1
16	DGND
17	MCN
18	MCP
19	DGND
20	MDN2
21	MDP2
22	DGND
23	MDN3
24	MDP3

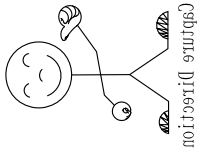

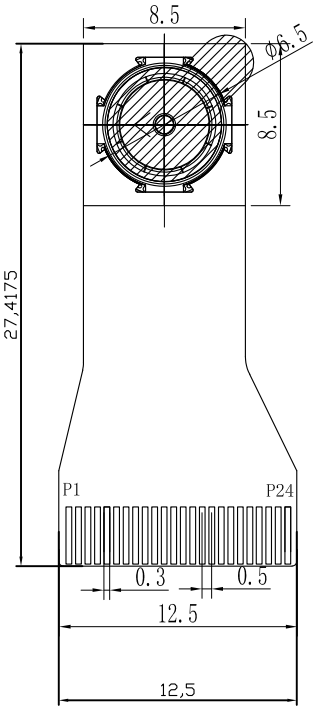

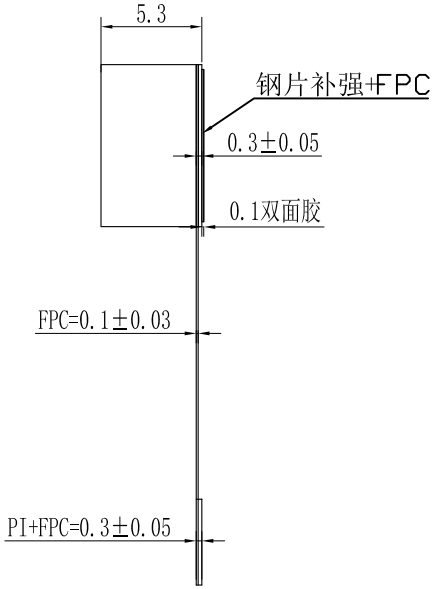

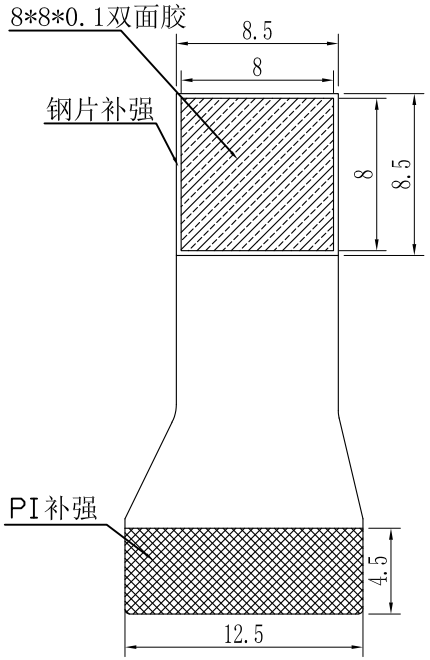

REV.	Zone	Description	Approved	Date
1/0	All	First Release	H	2021-12-03

焦距(EFL)		拍摄范围	
光圈(F/NO)		像素数	8M
视场角		镜头类型	1/4 inch
畸 变		感光芯片	0V8858

SELECT		✓		
level dim.	A	B	C	D
~ 5	±0.03	±0.05	±0.08	±0.10
5~10	±0.05	±0.08	±0.10	±0.15
10-~50	±0.08	±0.10	±0.15	±0.20
50~100	±0.10	±0.15	±0.20	±0.25
100~	±0.10%	±0.15%	±0.20%	±0.30%

Drawn :	H	2021-12-03	Part Number: ZV-P36-VE1.1	Version: 1/0
Checked :	H	2021-12-03	Projection Type: Third Angle / Unit: MM	Material:
Approved :	H	2021-12-03	Scale: 1:1	Surface Finish: ----------